ECA-1-10-AC | speed control by capacitors

By switching (in series or parallel) three built-in miniature motor capacitators, the motor speed is reduced in three steps.

Suitable for inset as well as for surface mounting, the splash-proved housing allows use in demanding (moist) environments.

Area of use: ceiling ventilators.

Features

- Supply: 230 Vac - 50/60 Hz
- Fuse (A) (5*20 mm), spare fuse included
- inset mounting: IP44/surface mounting: IP54
- Plastic enclosure external: ASA, RAL 9010 white-ivory, internal: polyamide according to IEC 60335
- Max ambient temperature: 35 °C

	ECA-1-10-AC
Current rating (A) / Power	1,0 A / 150 W
Fuse (A) 5*20 mm	F 1,25 A-H

Wiring diagram

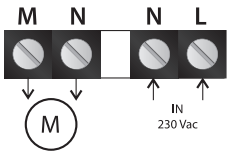

L: 230 Vac, 50/60 Hz
M: motor
N: neutral

Dimensions & fixing

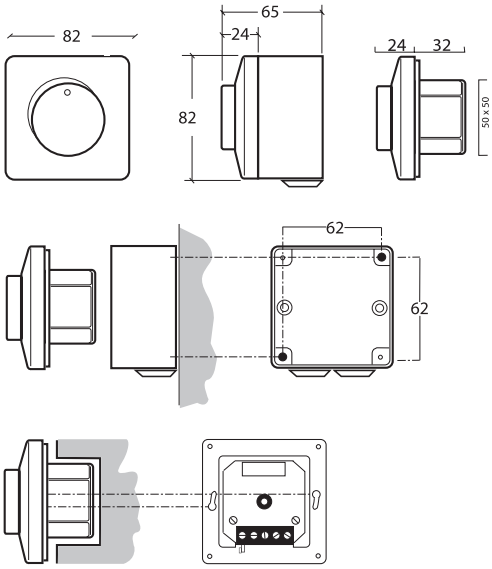

	net weight	gross weight
ECA-1-10-AC	230 gr.	250 gr.